Use glue on the connecting openings

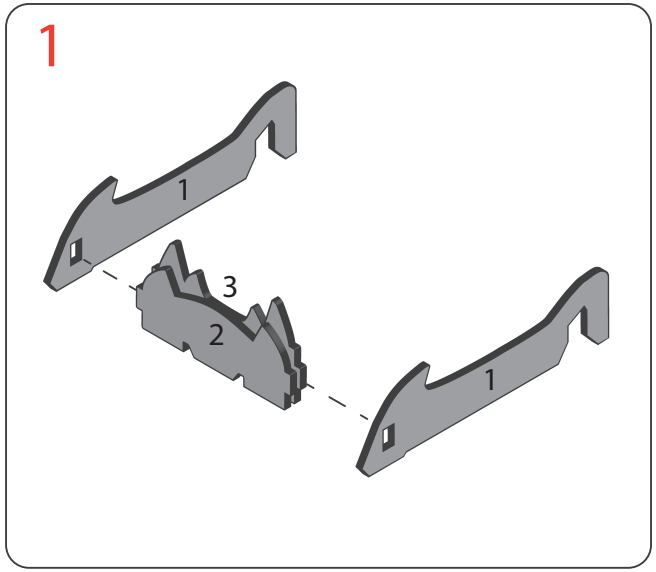

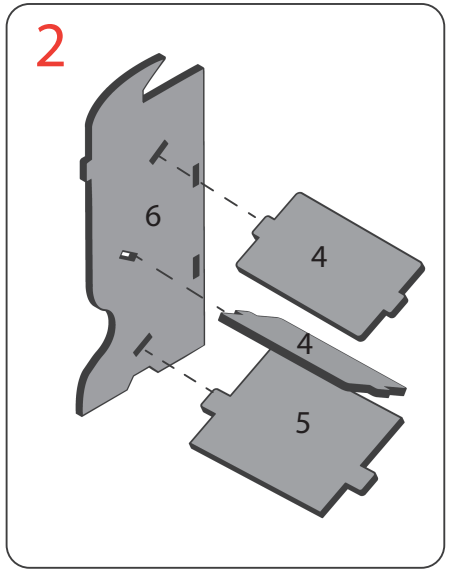

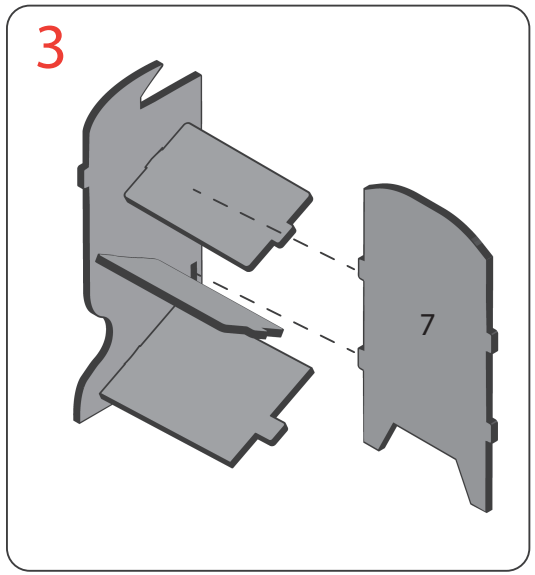

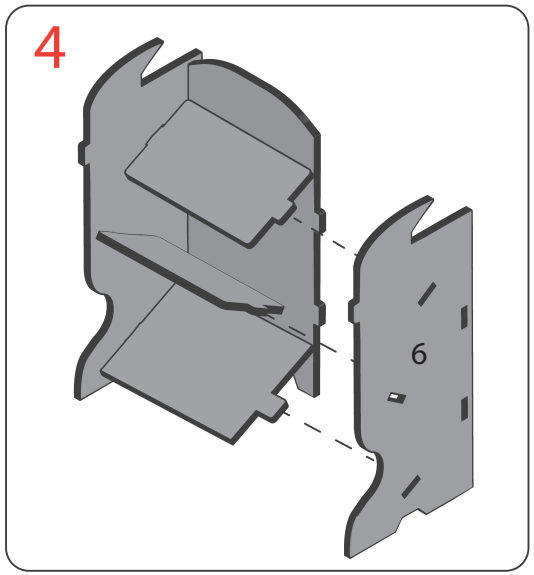

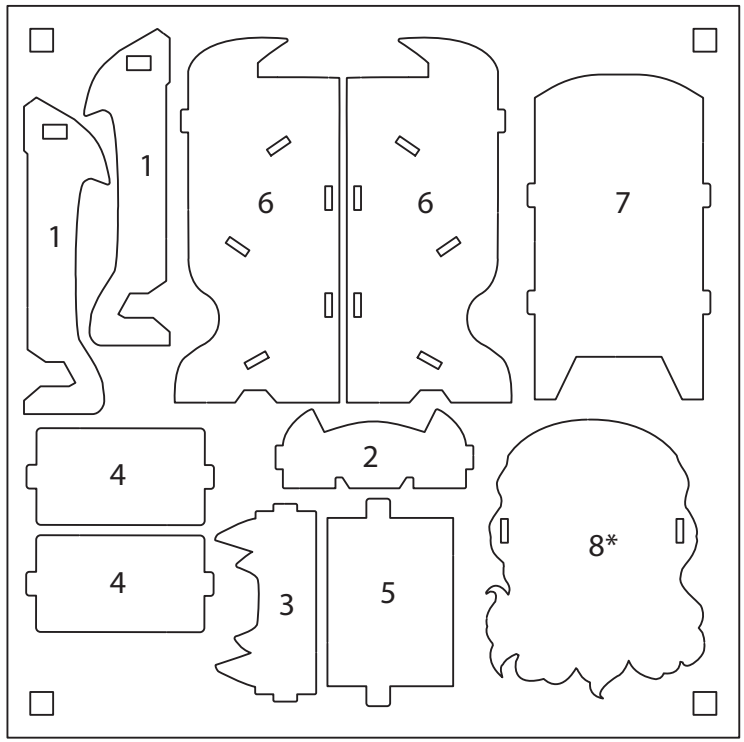

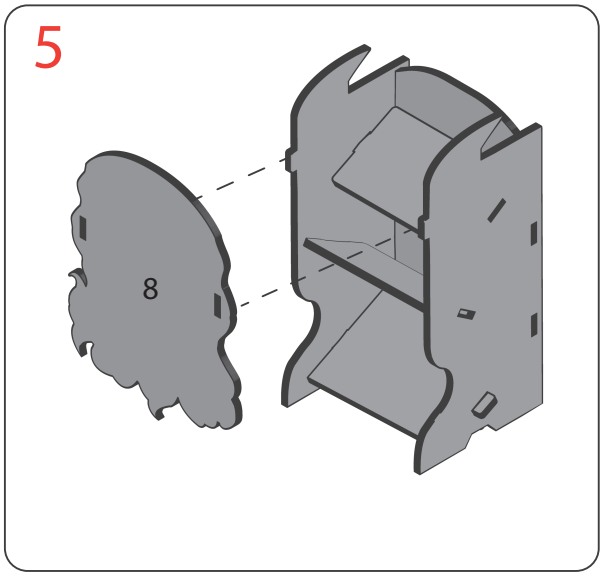

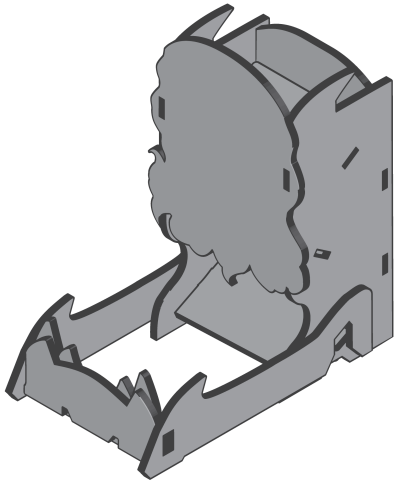

Please remove elements out of frame carefully.
It is recommended to use a blade at the cutline to punch the element out of the sheet easier

GLUE REQUIRED

*The shape of element 8 differs depending on design